The MATGOBO1940 is applied optical lens adopting hybrid light converging technology based on optical integrator matrix and optical fly-eye lenses matrix, each combination that consists of fly-eye lens unit and optical integrator unit handles the rays from one LED, a MATGOBO1940 optics can converge rays from LED matrix which has total 19 chips. The LED matrix can easily be high power when single LED in the matrix has high enough power. A very simple way is provided to install both MATGOBO1940 optics and corresponding LED matrix to form a high-power LED module. The light shape of MATGOBO1940 based LED module is firstly converging and then diverging after its focal point. In applications, a diaphragm must be placed at the focal point, size of diaphragm is usually same or very close to the focal point to shape light and keep high efficiency. Due to the function of the optical integrator, the module has a high level of color mixing performance. MATGOBO1940 is versatile optics permits to use a lens system or secondary optics to achieve different applications like LED based gobo projector, follow spotlight, moving head hybrid, washlight, spotlight, and beamlight, etc.

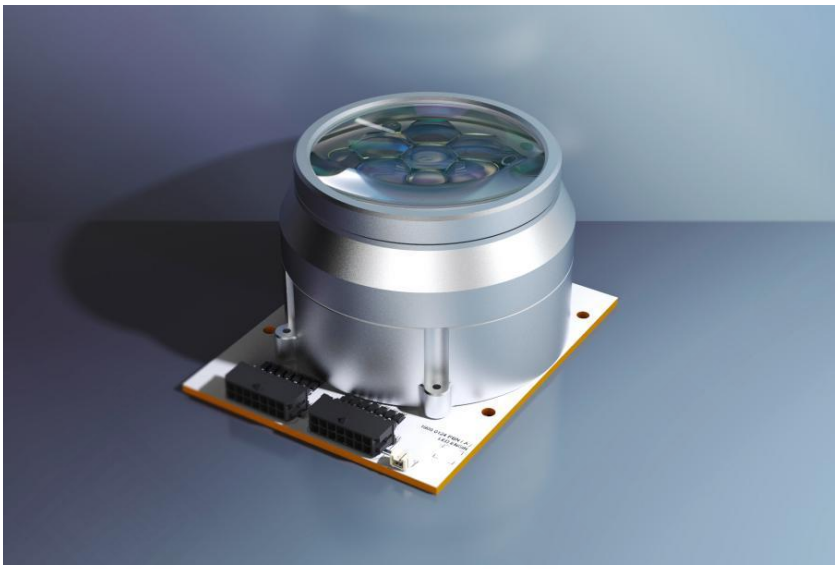

Fig1. MATGOBO1940 LED Module

MATGOBO1940

- Matched LED Matrix: 19 LEDs, 5050/5060 package 4 dies in one, e.g. RGBW
- Emitting Surface: Ø70mm
- Compatible Power: ≤ 760W
- Model Selection:

Model No.	Shape of focal point
MATGOBO1940F	Square
MATGOBO1940B	Octagon

- Mechanical Dimension:

Address: D4-1, Building A1 Tsinghus Science Park, Shilou Panyu, Canton, P.R.China
Tel: +86 020 82161267 | Email: led3d@led3d.com | Website: https://www.led3d.com/

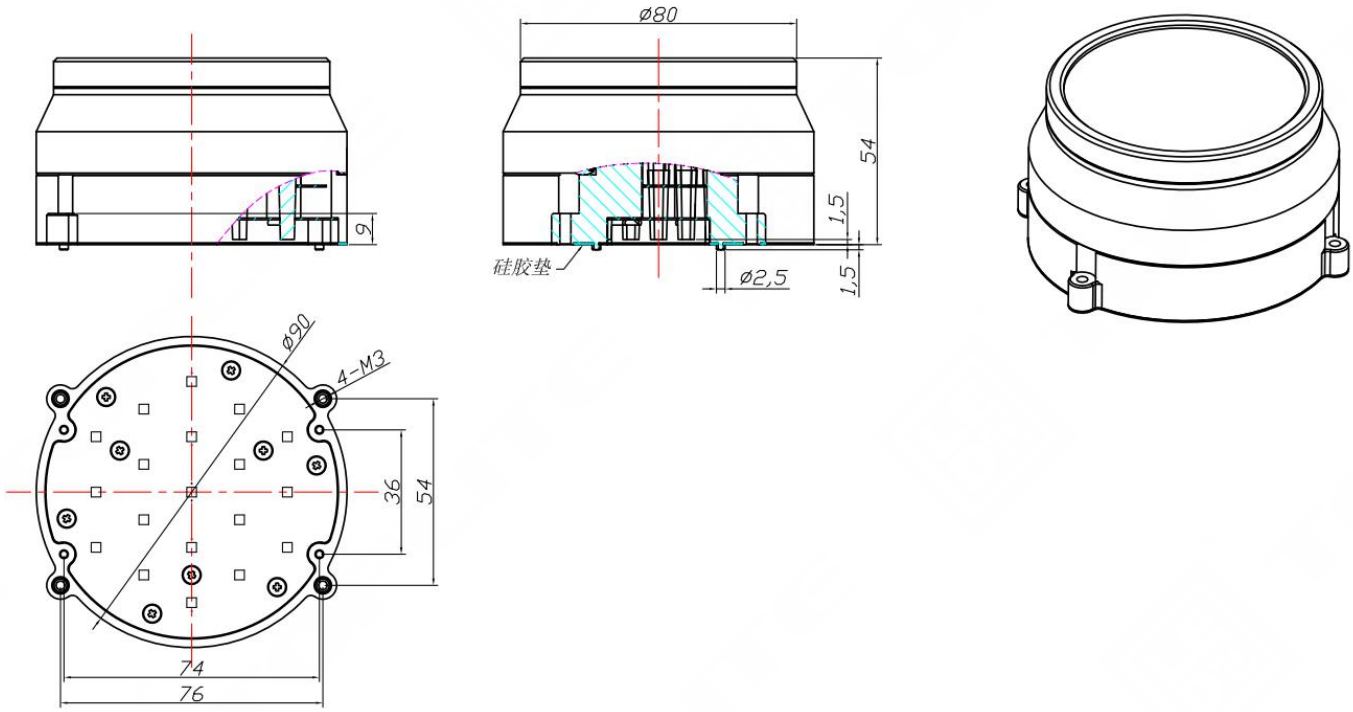

Fig2. MATGOBO1940 lens mechanical dimension

LED Matrix Board【Provide sample for testing only, not for sale in bulk order】:

- LED: OSRAM OSTAR Stage S2WN RGBW × 19
- Power: Maximum 760W

MATGOBO1940 LED Module(Sample):

- LED: using OSRAM OSTAR Stage S2WN RGBW × 19
- Outline Dimension: 90 × 90 × 59 mm
- Luminous Flux: 16,200 lm
- Light Shape:

Address: D4-1, Building A1 Tsinghus Science Park, Shilou Panyu, Canton, P.R.China
Tel: +86 020 82161267 | Email: led3d@led3d.com | Website: https://www.led3d.com/

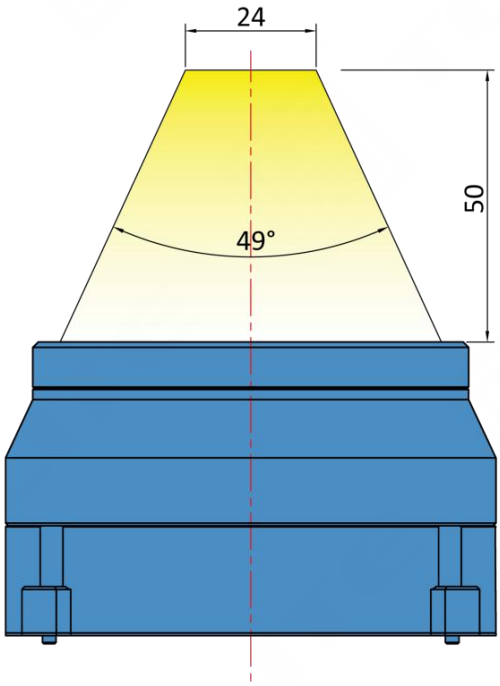

Fig3. Light Shape of MATGOBO1940 LED Module

The light shape showed in fig3 is based on the fact that the LED is OSRAM OSTAR Stage S2WN RGBW (Power 40W) or the LED with the same luminous surface.

Ordering Prompt:

Only provide the MATGOBO1940 optics without LED matrix in bulk order. Customer can select suitable LEDs to make the LED matrix according to the actual needs. Please be kindly noted that different LED has its own performances.

Address: D4-1, Building A1 Tsinghus Science Park, Shilou Panyu, Canton, P.R.China
Tel: +86 020 82161267 | Email: led3d@led3d.com | Website: https://www.led3d.com/