The STONEHENGE is designed for getting better color-mixing under high-power lighting applications. It is essentially an optics matrix composed of a number of light guide units. Each light guide unit handles the rays from one LED, therefore a STONEHENGE optics can handle rays from LED matrix having a number of LEDs with same quantity as light guide units inside the STONEHENGE. The LED matrix can easily be high power when there are enough chips. And a very simple way is provided to install both STONEHENGE optics and the LED matrix to form a high-power LED module. STONEHENGE based LED module may have large light emitting surface but with much narrower beam angle than common plane light source like COB and produces highly homogeneous light. It is versatile and permits to use a lens or secondary optics to collimate light without color separation.

Application fields: washlight, spotlight, profile spotlight, gobo projector and other lighting appliances that require high-level color mixing.

STONEHENGE 120RGBW

- LED Matrix: 3 LEDs, 5060 package RGBW, 4 dies in one, 40W
- Emitting surface: 9.7mm
- Beam angle: R, 45.2° / G, 44.9° / B, 47.7° / W, 50.4°

Fig1. STONEHENGE 120RGBW Optics

LED Matrix Board【Provide sample for testing only, not for sale in bulk order】:

- LED: OSRAM Ostar Stage RGBW 5060 package 40W × 3
- Power: 120W
- Input: 2.5A × 4 channels
- MCPCB: high thermal conductivity

Address: D4-1, Building A1 Tsinghus Science Park, Shilou Panyu, Canton, P.R.China
Tel: +86 020 82161267 | Email: led3d@led3d.com | Website: https://www.led3d.com/

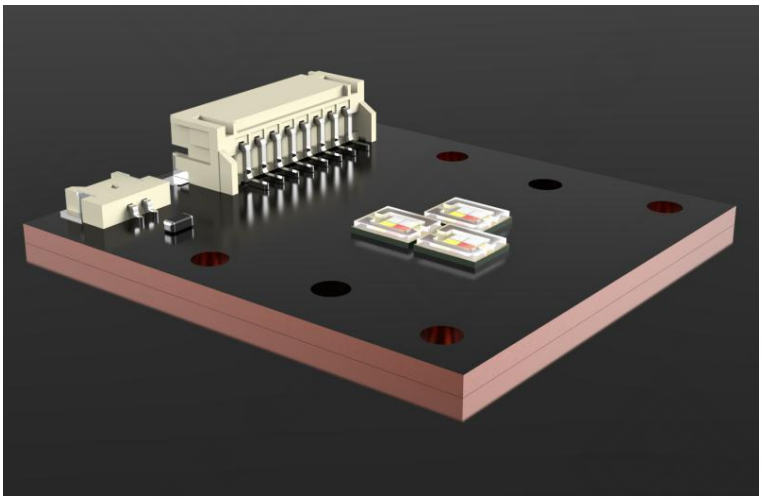

Fig2. LED Matrix with 3 RGBW LEDs

STONEHENGE 120RGBW LED Module:

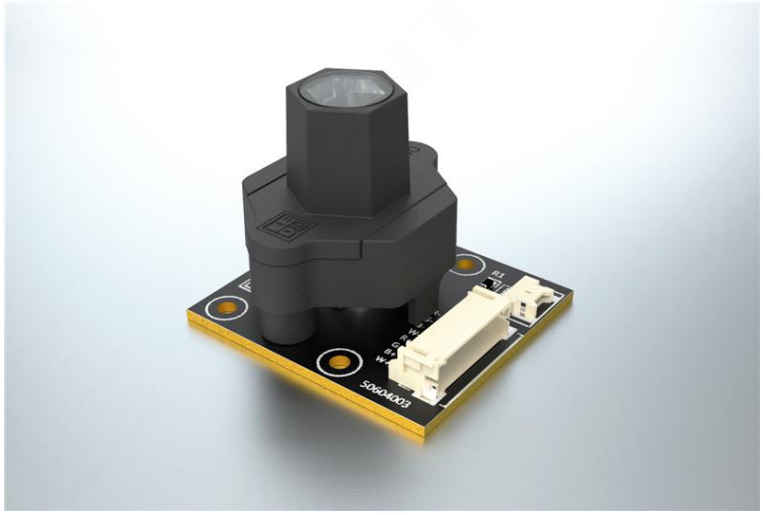

Fig3. STONEHENGE 120RGBW LED module

- Outline dimension: 50mm×46mm×35.8mm
- Luminous flux: 2,992 lm
- Single color control

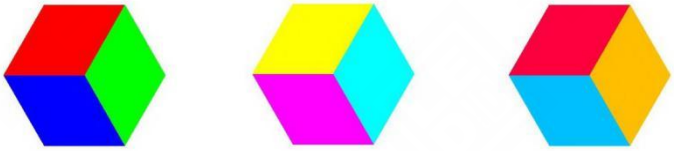

Fig4. color control

- Enhanced color-mixing

Fig5. Enhanced color-mixing

Address: D4-1, Building A1 Tsinghus Science Park, Shilou Panyu, Canton, P.R.China
Tel: +86 020 82161267 | Email: led3d@led3d.com | Website: https://www.led3d.com/

Test data of STONEHENGE 120RGBW LED module sample

I, Light intensity curve

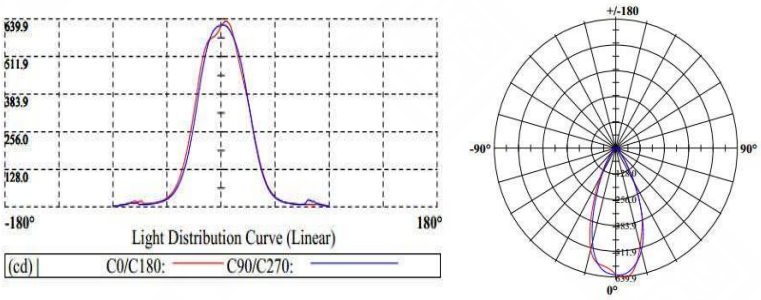

Fig6. Red: 45.2°@50% light intensity, 77.1°@10% light intensity

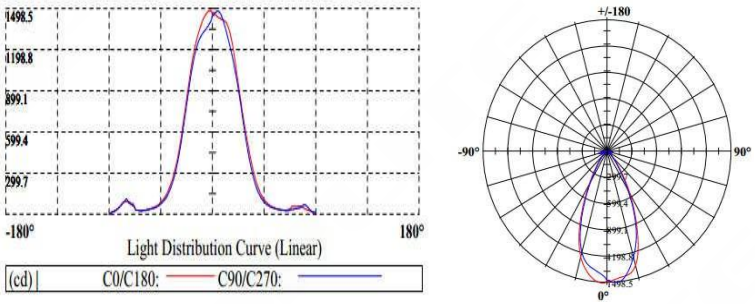

Fig7. Green: 44.9°@50% light intensity, 75.7°@10% light intensity

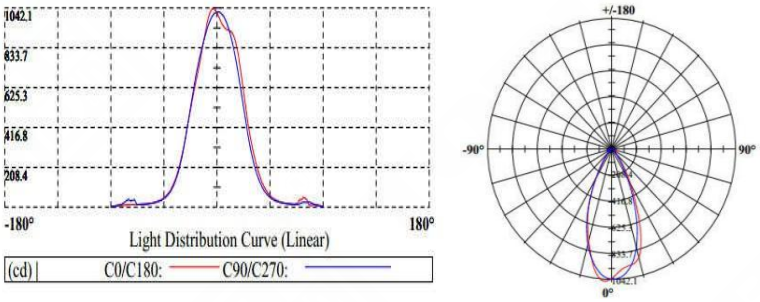

Fig8. Blue: 47.7° @50% light intensity, 79.6°@10% light intensity

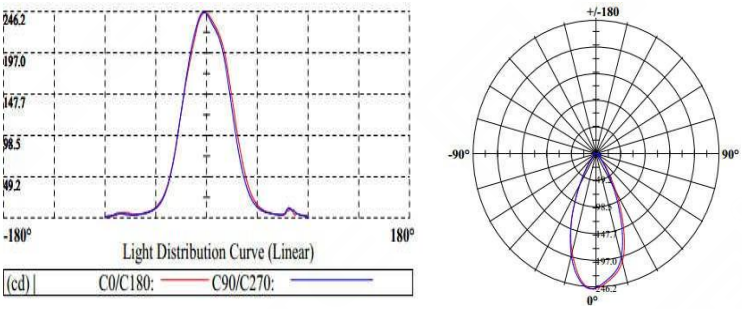

Fig9. White: 50.4° @50% light intensity, 81.4°@10% light intensity

Address: D4-1, Building A1 Tsinghus Science Park, Shilou Panyu, Canton, P.R.China
Tel: +86 020 82161267 | Email: led3d@led3d.com | Website: https://www.led3d.com/

II, Data sheet

Item	Unit	RGBW			
		R	G	B	W
Test current	A	2.5	2.5	2.5	2.5
Test voltage	V	8.4	12.4	10.1	10.2
Luminous flux	lm	513.81	865.69	182.52	1429.6
Luminous efficiency	lm/W	24.47	27.93	7.23	56.06
Radiant flux	W	3.47	1.84	5.73	4.85

III, Connection

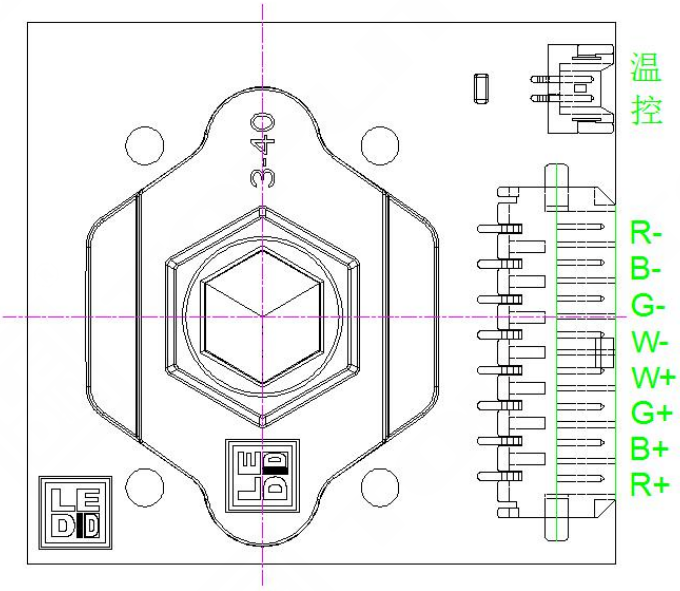

Fig10. Connection of STONEHENGE 120RGBW LED module

IV, Electrical parameter

Parameter	Unit	Min	Typical	Max
Thermal resistance, junction to soldering point	°C/W		1.8	
Low temperature coefficient of Voltage	mV/°C		-8	
ESD	V			2,000
Power (R)			13.4	
Power (G)			22.1	
Power (B)			18	

Address: D4-1, Building A1 Tsinghus Science Park, Shilou Panyu, Canton, P.R.China
Tel: +86 020 82161267 | Email: led3d@led3d.com | Website: https://www.led3d.com/

Power (W)			18	
Forward Current (R)	A		1	2.5
Forward Current (G)	A		1	2.5
Forward Current (B)	A		1	2.5
Forward Current (W)	A		1	2.5
Forward Voltage (R)	V			8.4
Forward Voltage (G)	V			12.4
Forward Voltage (B)	V			10.1
Forward Voltage (W)	V			10.2
LED Junction Temperature	℃			150
Luminous Flux	lm			2,992
Ambient Temperature	℃	-40		+70
Color Rendering Index	CRI	70		

V, Light shape

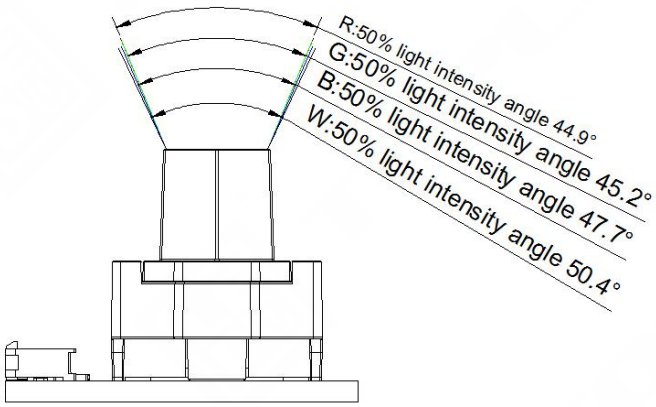

Fig11. Light shape of STONEHENGE 120RGBW LED module

VI, Outline dimension

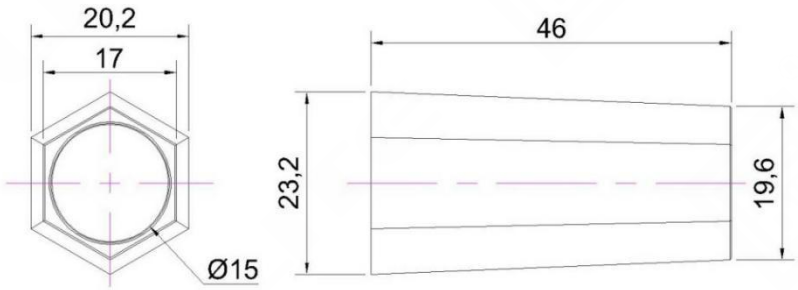

Address: D4-1, Building A1 Tsinghus Science Park, Shilou Panyu, Canton, P.R.China
Tel: +86 020 82161267 | Email: led3d@led3d.com | Website: https://www.led3d.com/

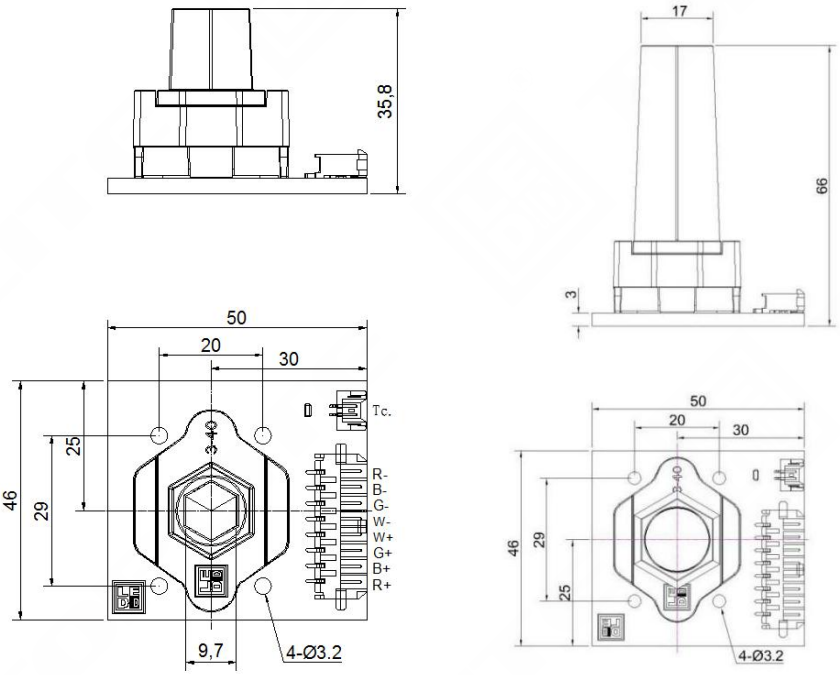

Fig12. Outline dimension of STONEHENGE 120RGBW LED module

Ordering Prompt:

Only provide the STONEHENGE optics without LED matrix in bulk order. Customer can select suitable LEDs to make the LED matrix according to the actual needs. Please be kindly noted that different LED has its own performances.

Address: D4-1, Building A1 Tsinghus Science Park, Shilou Panyu, Canton, P.R.China
Tel: +86 020 82161267 | Email: led3d@led3d.com | Website: https://www.led3d.com/