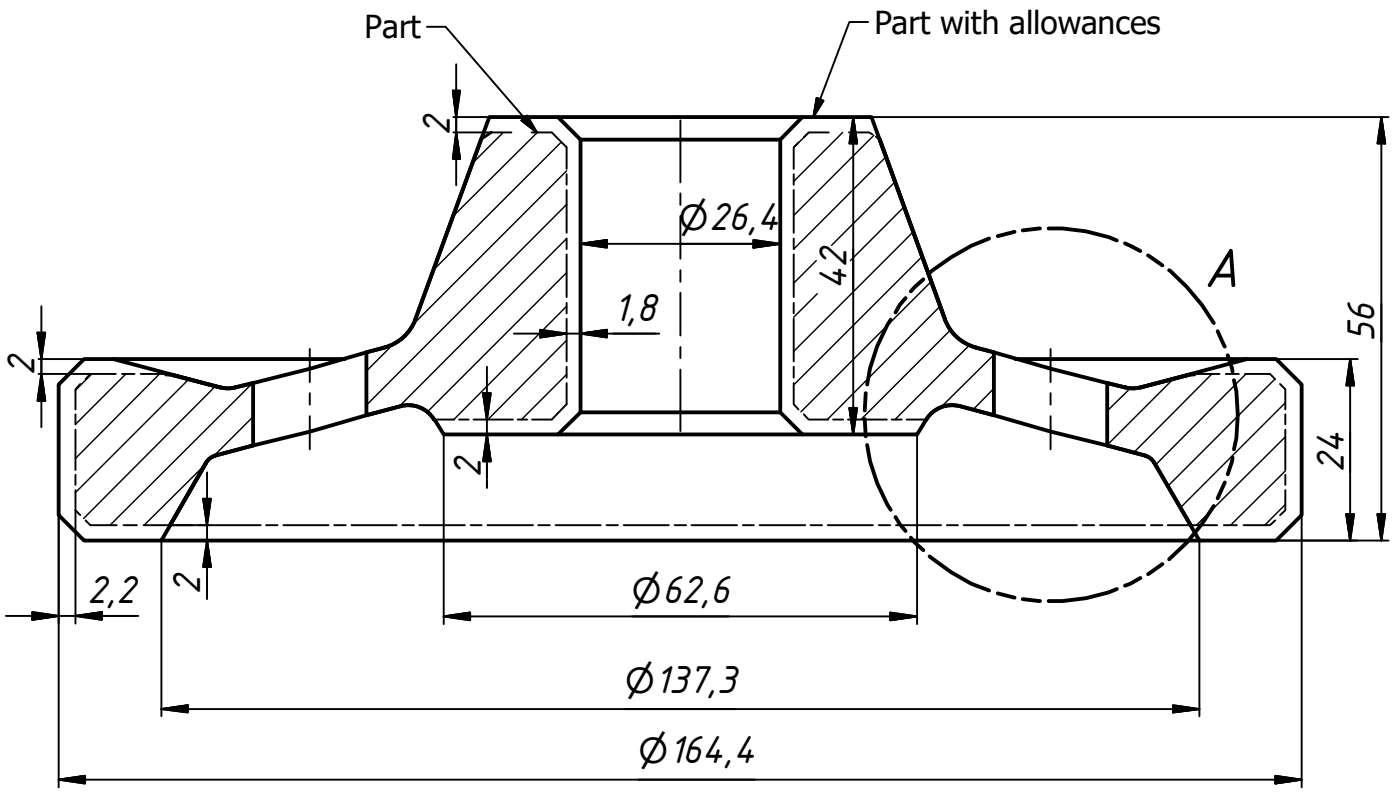

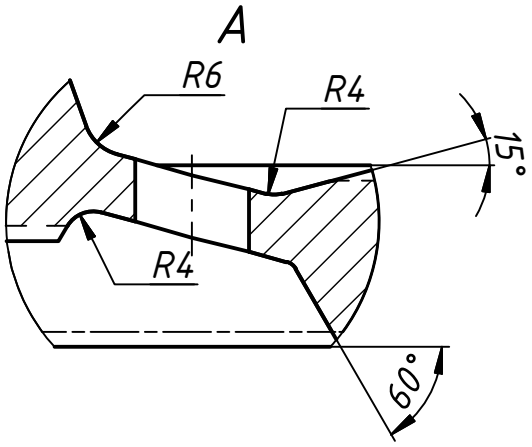

DRAWN					
CHECKED					
QA		TITLE			
MFG					
APPROVED					
		SIZE A4		DWG NO	REV
		SCALE 1 : 1	Material: 41Cr4	SHEET 1 OF 1	